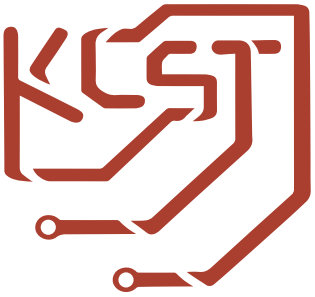

KUWAIT COLLEGE OF SCIENCE & TECHNOLOGY

كلية الكويت للعلوم والتكنولوجيا

YEARBOOK

2021-2022

H. H. Meshal Al-Ahmad Al-Jaber Al-Sabah
Amir of the State of Kuwait

Table of Contents

1 Our University 7

Milestones 8
Associate University 11
IIT Delhi -KCST's Curricular Partner University 11
Our Progress 12
Applicants 12
Students enrolled in the Degree programs. 12
Students enrolled in the Foundation program. 12
Highlights 13
Institutional Accreditation 13
ABET Accreditation 13
KSE Approval 13

2 Academic Year 2021-2022 15

Conferences and Projects 16
3rd Cybersecurity Education and Research Conference (CERC 2021) – November 2021 16
Annual Cybersecurity Week – November 2021 18
1st 5G Lab in Kuwait by KCST and Huawei - March 2022 19
Women in Research Conference – March 2022 22
1st Career Fair – June 2022 23
Darasati Exhibition – May 2022 26

Seminars and Workshops 28
Student Life and Alumni 30
Collaborations with external parties (MOUs Signed with Industry) 34
Community Engagement 34

3 Our students 37

Samples of the “Final Year Projects” by students 28

4 Graduation Ceremony 43

Class of 2022 Graduation Ceremony 44
The Graduates 45
Fall 2021-2022 45
Spring 2021-2022 46
Summer 2021-2022 48
Photos from the Graduation Ceremony 2022 50

5 Alumni Testimonials Ceremony 57

1

OUR UNIVERSITY

MILESTONES

2008

The College is licensed under the Amiri Decree No. 106 of 2008 by the Ministry of Higher Education (MOHE) as the Kuwait Institute of Science and Technology.

2011-2015

KCST campus construction at Doha District, Block 7, Kuwait

2015

Name changed to Kuwait College of Science and Technology by the Amiri Decree No 148 of 2015 on 20 May 2015

2015

4 October first KCST President takes office

2015

21 October PUC approval to start operations at Doha Campus

2015

20 November PUC approval to open admission to students

MILESTONES

2016

17 January, classes started with the first 16 students in the Foundation program

2016

15 September, Degree programs commence. KCST is fully operational, with a total of 340 students enrolled in the degree and foundation programs

2021

16 June, Institutional Accreditation

2022

26 August, ABET Accreditation for Engineering Programs: Computer Engineering and Electronics and Communications Engineering until 30 September 2028

2021

KCST attained a maximum student Capacity of 1800

2022

30 October, Kuwait Society of Engineers (KSE) approved applications of KCST graduates for KSE membership

भारतीय प्रौद्योगिकी संस्थान दिल्ली
INDIAN INSTITUTE OF TECHNOLOGY DELHI

ASSOCIATE UNIVERSITY

IIT Delhi -KCST's Curricular Partner University

Indian Institute of Technology Delhi (IIT Delhi) was established in 1961 as a centre of Excellence for training, research and development in science, engineering, and technology. It was selected as an Institute of Eminence and is ranked 185 globally in the QS World University Ranking and 54 in the QS subject ranking (Engineering and Technology). It produces top entrepreneurs, scientists, economists, politicians, and lawyers.

2004 Phase One:

Agreement signed between the Indian Institute of Technology-Delhi (IIT Delhi) and KCST to create the curriculum and all essential policies and procedures to secure approvals from the PUC for three programs. Phase one of the agreement was achieved in 2008.

2010-2016 Phase Two:

Agreement to support the setup of the College, including consultancy and advice on the infrastructure, laboratories, library, and recruitment of senior management positions, including the President and Dean of Faculty.

2016-2020 Phase Three:

Focus on supporting teaching and faculty recruitment. The IIT Delhi team members reviewed the curriculum and suggested improvements and advancements to meet international standards. This period saw interactions between the two institutions, including visits to the KCST campus to ensure the quality of academic and functional operations.

2020-2025

IIT Delhi will continue to provide quality monitoring and support for the expansion programs of the College and its plans for changing status to a full-scale university.

OUR PROGRESS

Applicants

SEMESTER	Spring 2015-16	Fall 2016-17	Spring 2016-17	Fall 2017-18	Spring 2017-18	Fall 2018-19	Spring 2018-19	Fall 2019-20	Spring 2019-20	Fall 2020-21	Spring 2020-21	Fall 2021-22	Spring 2021-22
Total	16	332	47	165	45	238	58	330	45	290	63	624	62
Male	6	156	19	49	25	98	26	133	19	162	30	294	25
Female	10	176	28	116	20	140	32	197	26	128	33	330	37

Students enrolled in the Degree programs

SEMESTER	Spring 2015-16	Fall 2016-17	Spring 2016-17	Fall 2017-18	Spring 2017-18	Fall 2018-19	Spring 2018-19	Fall 2019-20	Spring 2019-20	Fall 2020-21	Spring 2020-21	Fall 2021-22	Spring 2021- 22
CE	-	100	161	182	212	272	297	364	367	486	453	614	643
ECE	-	66	117	137	148	193	235	337	377	498	470	616	628
CS	-	5	10	21	24	44	39	68	69	68	55	60	68
TOTAL	0	171	288	340	384	509	571	769	813	1052	978	1290	1339

Students enrolled in the Foundation program

SEMESTER	Spring 2015-16	Fall 2016-17	Spring 2016-17	Fall 2017-18	Spring 2017-18	Fall 2018-19	Spring 2018-19	Fall 2019-20	Spring 2019-20	Fall 2020-21	Spring 2020-21	Fall 2021-22	Spring 2021-22
Total	16	177	75	168	147	239	215	327	289	270	274	468	358
Foundation 1	4	112	21	109	26	182	24	268	21	241	24	352	0
Foundation 2	12	65	54	59	121	57	191	59	268	29	250	116	358

HIGHLIGHTS

Institutional Accreditation

The PUC granted KCST Institutional Accreditation for five years (2021-2026). KCST is proud to be the first private university in kuwait to receive Grade A accreditation in its first round, indicating its academic excellence, technological development, and the great value this achievement adds to the work field.

ABET Accreditation

KCST received ABET Accreditation for its Engineering Programs: Bachelor of Engineering in Computer Engineering and Bachelor of Engineering in Electronics and Communications Engineering until September 30, 2028.

The accreditation action for these two newly accredited programs extends retroactively from October 1, 2019.

KSE Approval

Kuwait Society of Engineering (KSE) approved the applications of KCST graduates for KSE membership based on the ABET Accreditation.

2

ACADEMIC YEAR 2021-2022

CONFERENCES AND PROJECTS

3rd Cybersecurity Education and Research Conference (CERC 2021) – November 2021

The 3rd Cybersecurity Education and Research Conference (CERC) is a joint venture organized by the UK Government in collaboration with Kuwait's Communication and Information Technology Regulatory Authority (CITRA), the British Embassy in Kuwait, the Kuwait College of Science & Technology (KCST), Kuwait University (KU) and The Kuwait Foundation for the Advancement of Sciences (KFAS). The conference took place at Kuwait University campus (Nov 23 and 24, 2021).

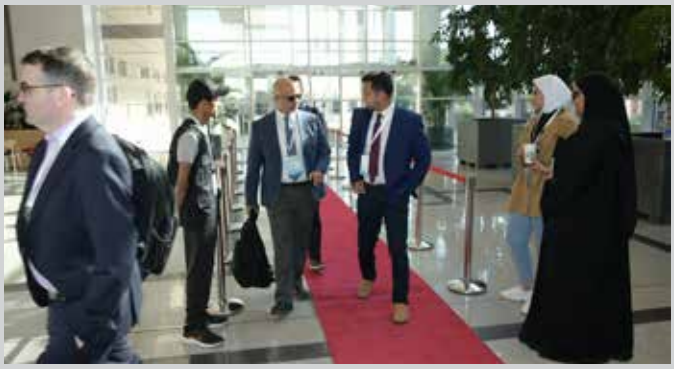

cerc
Help Desk

cerc
Registration Desk
Registration Desk

KFAS

2022

Annual Cybersecurity Week – November 2021

Kuwait College of Science and Technology conducted the 2nd Annual Cybersecurity Week during the period Nov 21 to Nov 25, 2021. It consisted of several lectures, workshops, and student competitions in cooperation with senior specialists in the field of cybersecurity. The training programs aimed to increase the awareness of cybersecurity and the necessity to safeguard all data and other information among the community.

1st 5G Lab in Kuwait by KCST and Huawei - March 2022

KCST hosted the first Huawei 5G Lab and 5G Star simulation training system in Kuwait as part of the newly launched Huawei ICT Academy at KCST. The KCST partnership is the latest initiative by Huawei to develop Kuwait's talent ecosystem. The Academy's training will be delivered through master classes, seminars, industry trips, and ICT competitions. Students will receive special discounts for Huawei certification exams and issued certificates upon graduation. The industry-standard ICT training and certification will boost students' career opportunities, and Huawei has pledged to support graduates with work placement.

awei KCST ICT Ac my
La Opening Cer ony

5G

5G

Huawei KCST
5G Lab Openi
The First 5G Lab

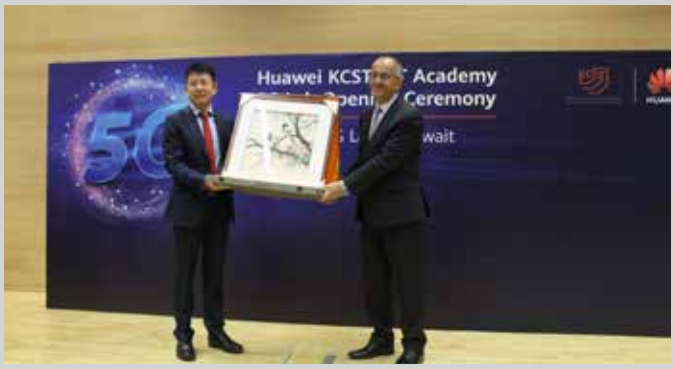
Huawei KCST
Academy
Ceremony

Huawei KCST ICT Academy
5G Lab Opening Ceremony

Huawei KCST ICT Academy
5G Lab Opening Ceremony
The First 5G Lab in Kuwait

Huawei KCST ICT Academy
5G Lab Opening Ceremony
The First 5G Lab in Kuwait

Women in Research Conference – March 2022

Kuwait College of Science and Technology hosted 'Women in Research' Conference in collaboration with the British Council, KCST the to highlight essential topics related to females' contribution to the research field, especially in the Middle East

1st Career Fair – June 2022

The Kuwait College of Science and Technology held its first job fair and an exhibition of projects for its graduate students, which opened on June 22 and June 23, 2022, in its campus located in Doha, in the presence of Her Excellency Mrs. Belinda Lewis, Ambassador of the United Kingdom. Many private companies and some government institutions participated in the exhibition, including Al Mulla Group, the National Bank of Kuwait, Kuwait Finance House, the Public Authority for Youth Affairs, Zain Communications Company, STC, Huawei, Al Mulla Exchange, Al Mulla Automotive Group, Ali Abdul Wahab Al Mutawa Group, Kuwait International Bank, Boubyan Bank, and the Ministry of Finance.

1st Career Fair
المعرض الوظيفي الأول

1 Career Fair

ooking for the
f a Lifetime?

ETS

تبي وظيفة العمر؟
Looking for the
Career of a L
الوطني
NBK

Your Future Starts with Us
مستقبل واعد بانتظارك معنا

Darasati Exhibition – May 2022

The Kuwait College of Science and Technology is devoting a three-day educational exhibition to Darasati at the Avenues Mall, which will be on display from the twelfth to the fourteenth of May 2022, in order to introduce the distinguished high school students graduating this year to the university and its specializations.

KUWAIT COLLEGE OF SCIENCE & TECHNOLOGY
كلية الكويت للعلوم والتكنولوجيا

SEMINARS AND WORKSHOPS

1. KFAS Seminar ‘Global Entrepreneurship Report’
2. ‘Education for Climate Change’ Seminar
3. E2C One Week Seminars
4. Cyber Ethical Hacking (CEH) Workshop
5. Hacking Snapchat Workshop
6. Acta ‘ECO CITIES’ Workshop
7. ‘The Scientific Method in the Quran’ Seminar

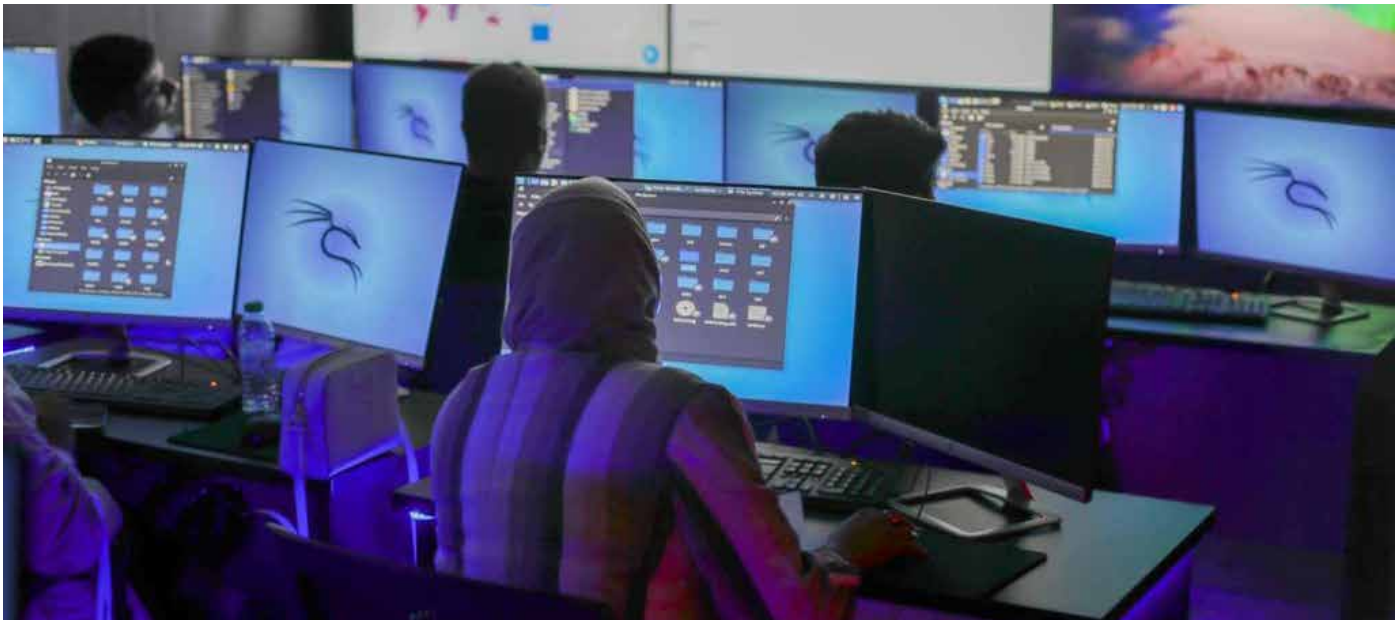

SEMINARS AND WORKSHOPS

STUDENT LIFE AND ALUMNI

1. Cyber Security Accelerator by CyLon UK
2. Stevens Initiative “The NextGen Coders Network”
3. Huawei Seed for the Future 2021
4. ICT Innovation- Tech4Good Program
5. Collegiate Penetration Testing Competition (CPTC)- Dubai – Oct 2021
6. 9th Kuwait Collegiate Programing Contest KCOC –Nov2021
7. 6th IET GCC Robotics Challenge
8. Outstanding Performance in HUAWEI ICT – Saudi Arabi - Dec 2022
9. Hackathon - Sabah Al-Salem Foundation
10. Figma workshop at KCST campus
11. Stars of Science Season 14- Qatar
12. Mena Hackathon – the first ‘Virtual Hackathon.’
13. GITEX 2021 - Dubai
14. Robotics Club Event- Campus
15. Gaming Club Event- Campus
16. Debate Competition - KIST
17. Welcome back to the new academic year (orientation week)
18. KCST Open Day
19. Internships with Student Life Unit
20. University of Cambridge Training Opportunity
21. Daar Al Mehan
22. Kuwait Society for Inventors and Innovations – API
23. ‘Think, Talk & Act Climate’ Competition
24. SOLIYA Connect Program – Global Circles
25. ‘Personal Brand’ Seminar
26. World Poetry Day Event
27. KCST student participated in photography and painting Expo Dubai 2022
28. ‘DIY Ramadan Decoration’ Workshop
29. Travel Around the World Event
30. Morning Poetry Show by the SSC
31. Forming a Passion into a Club
32. Welcoming New Clubs on Board
33. Student Support Committee (SSC) New President
34. Higher Education Athletics League
35. New Volleyball Team
36. Private Universities Annual League (UAAK)
37. Volunteers Bank
38. LOYAC DARB Program
39. Working with Alliance
40. Jobs at Virgin Mobile
41. Alumni on KWT TV youth program

STUDENT LIFE AND ALUMNI

STUDENT LIFE AND ALUMNI

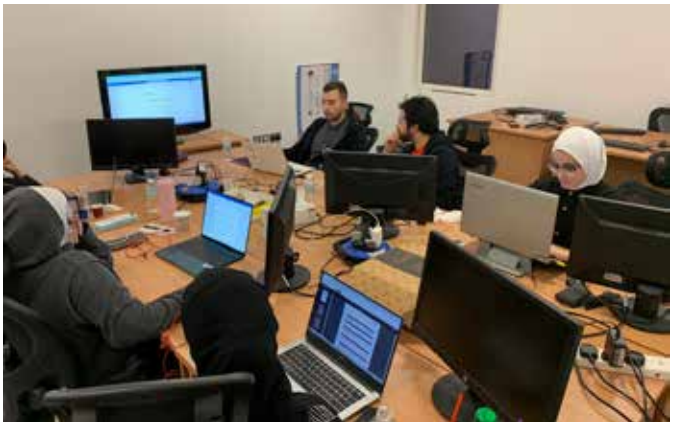

STUDENT LIFE AND ALUMNI

COLLABORATIONS WITH EXTERNAL PARTIES (MOUS SIGNED WITH INDUSTRY)

1. National Bank of Kuwait (NBK)
2. National Library of Kuwait
3. Kuwait Youth Development Association (KYDA)
4. ALLIANCE
5. Prime Student Services
6. AMIDEAST
7. Student Hub

COMMUNITY ENGAGEMENT

1. Emotional Wellbeing Week
2. 'Save A Life' Campaign by Trash Hero
3. Breast Cancer Awareness Event
4. Cleanup Campaign (KCST outside area)
5. AMIDEAST Free Career Empowerment Program
6. Arabic Calligraphy Workshop
7. Field Trip to the Liberation Tower
8. 'Heart 2 Heart' Campaign
9. Sulaibkhat Beach Clean-up
10. Kuwait National Day and Liberation Day Celebrations
11. Ramadan Celebration
12. International Women's Day Celebration
13. Mother's Day Event

COMMUNITY ENGAGEMENT

COMMUNITY ENGAGEMENT

3

OUR STUDENTS

SAMPLES OF THE "FINAL YEAR PROJECTS" BY STUDENTS

Below are some selected projects as samples.

Smart Medicine Box

Project team

Mathayel Alshammari

Modhawi Alazmi

Reem Almubaye

Retaj Abran

Supervisor

Prof. Haidar Ramadhan

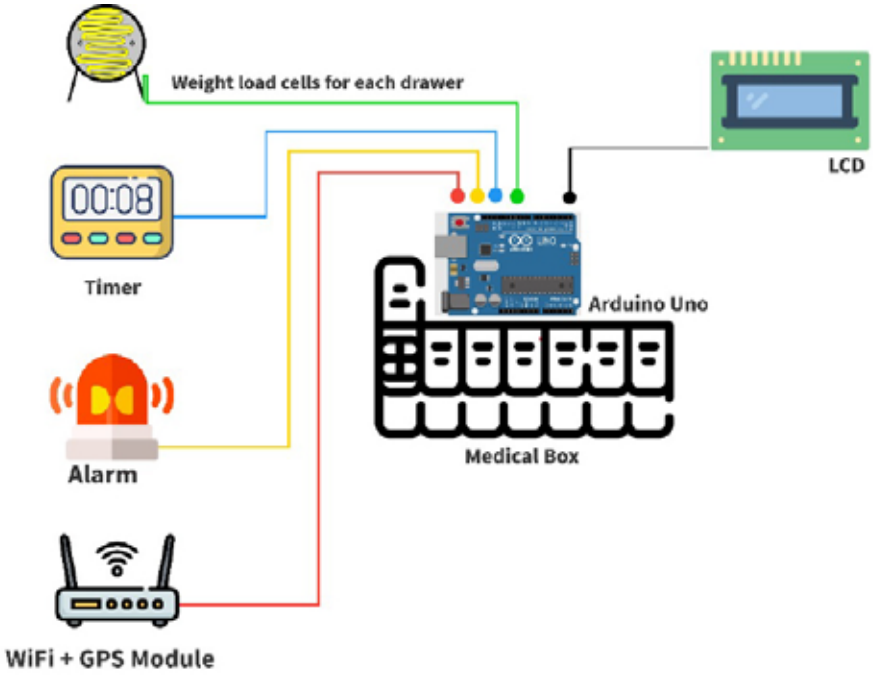

A Traffic Regulation system based on RFID technology

Project team

Bandar Aldhefiri

Mohammed Alazmi

Rajaan Aldhafeeri

Saud AlRasheedi

Supervisor

Dr. Murad Khan

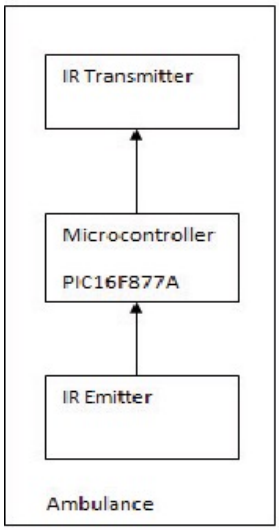

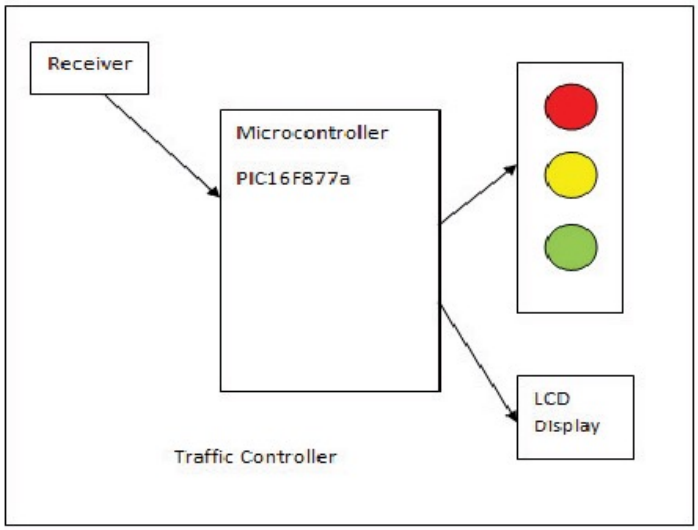

Pet's Smart Home

Project team

Asmaa Aldhafairi

Aseel Alhussaini

Mohammed Almuhanna

Emad Aboseedo

Supervisor

Dr. Abdullatif Baba

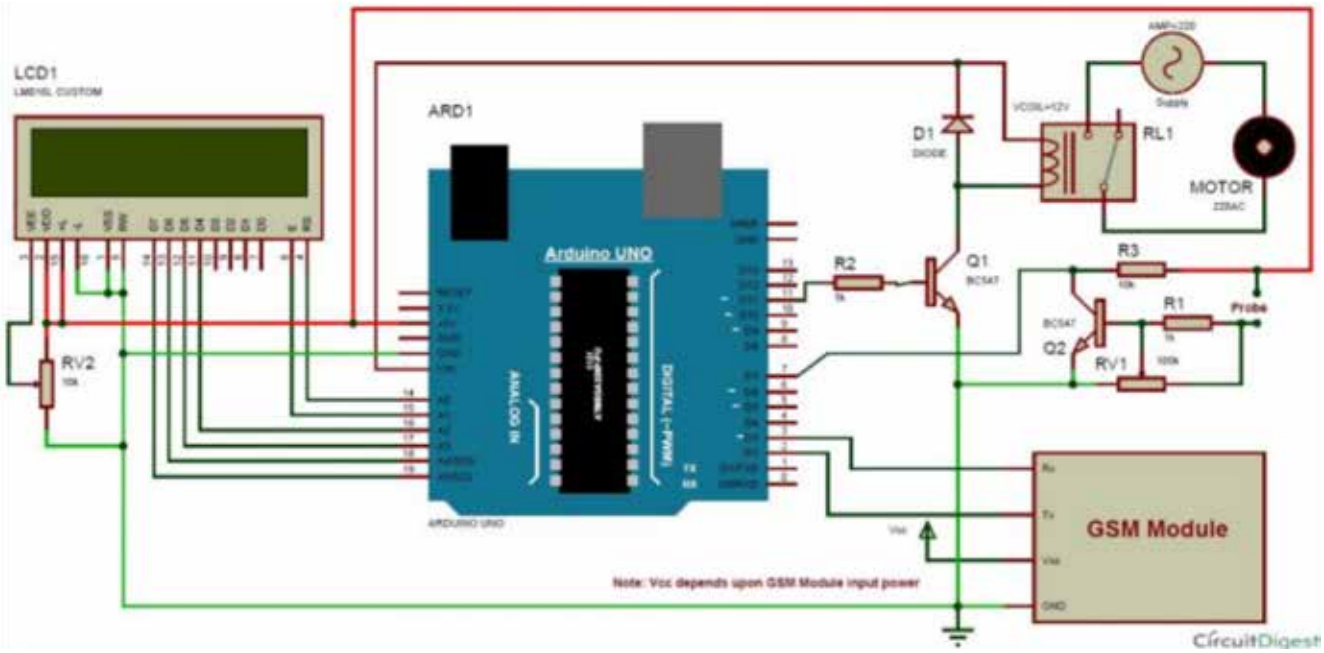

Smart Garden

Project team

Retaj almelhem

Mubarak Aloraifan

Noura Alenezi

Abdullah Aldulaimi

Supervisor

Tareq Mohedat

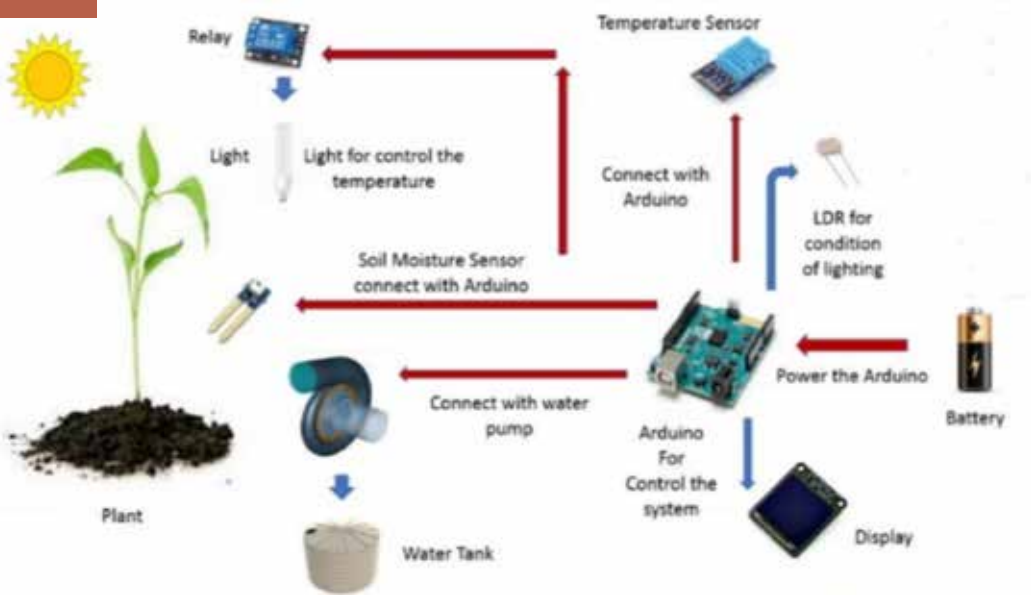

Fingerprint Attendance System

Project team

Mariam Alqallaf

Alaseel Alshammari

Sara Alajmi

Amal Almutiri

Supervisor

Farid Jradi

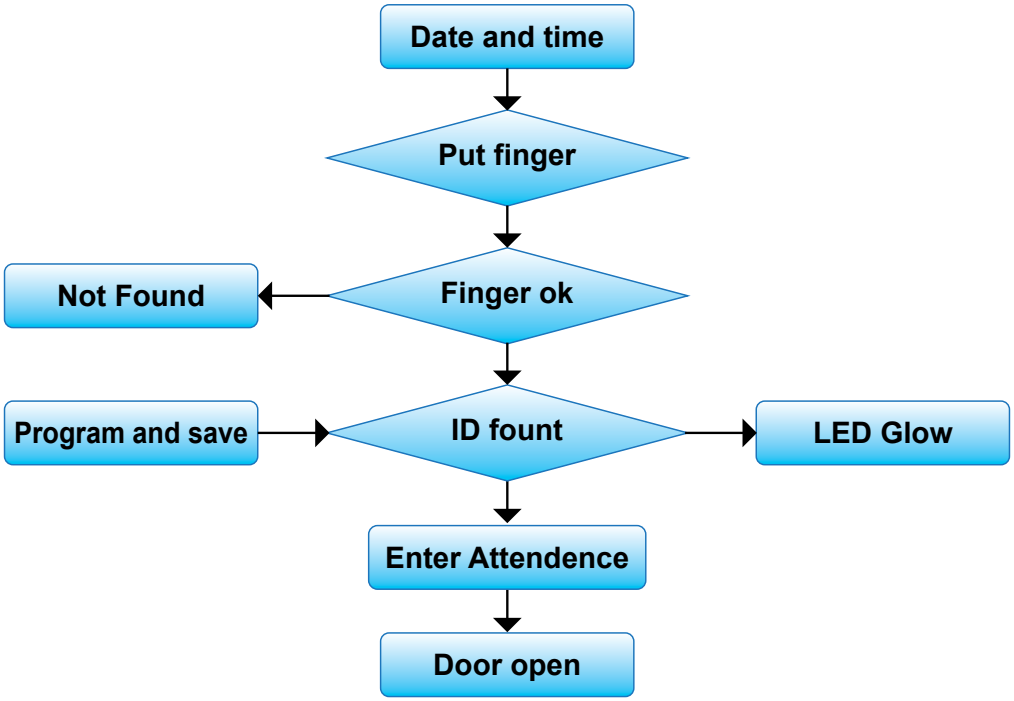

Secure You Home Automation System for Home Security

Project team

Haya Alqahtani

Sara Alarou

Asayel Alenezi

Fatemah Alsaeedi

Supervisor

Dr. Mohammed Naji

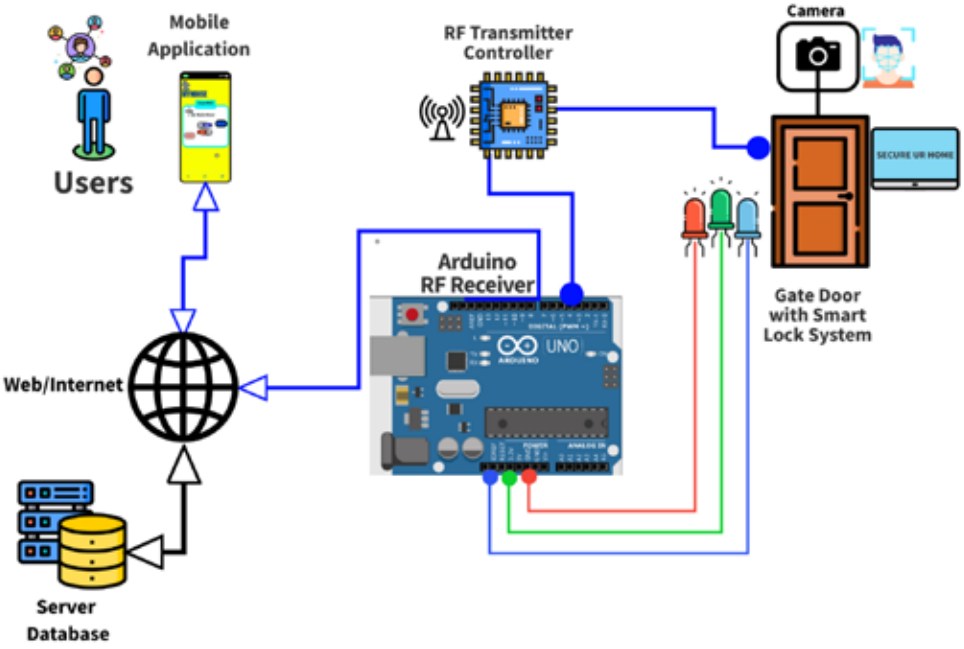

Iot Temperature Control For Cryptocurrency Mining Server Rooms With Mqtt Messaging Protocol Over Cloud

Project team

Tahani AlEnezi

Saja AlEnezi

Jomana AlFadhli

Ghader AlAshwak

Aisha AlMutairi

Supervisor

Dr. Omer Adam

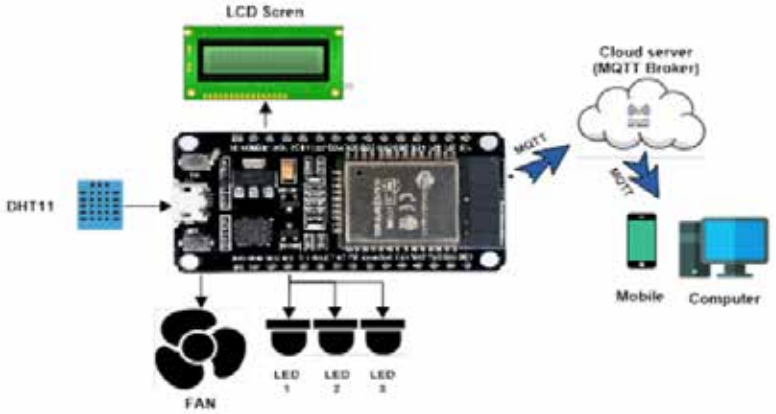

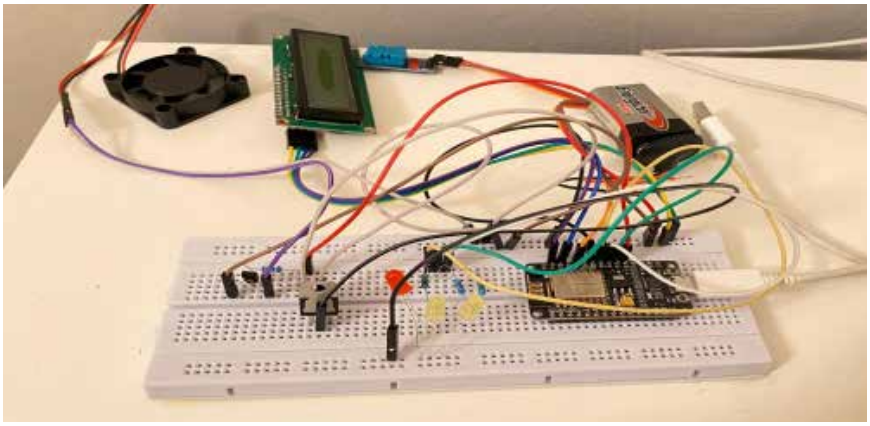

An Autonomous Moving Trolley for Medical Supply Distributionin Hospitals

Project team

Ibraheem Khater

Jumana Alrashidi

Tahani Almutairi

Moudhi Almutairi

Supervisor

Dr.Ismaeel AlRidhawi

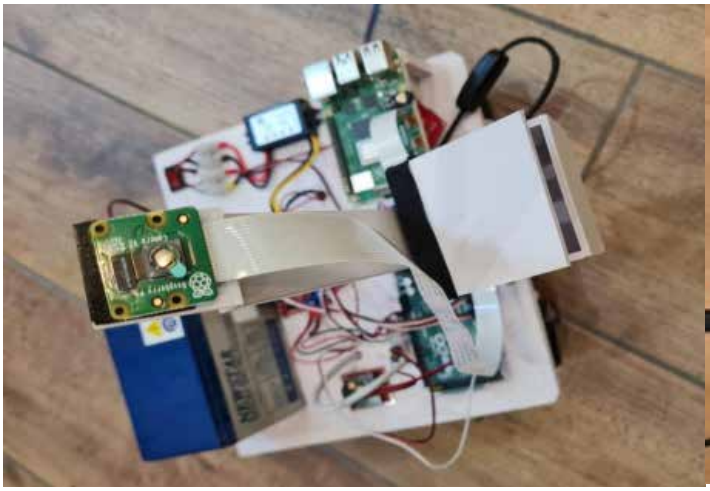

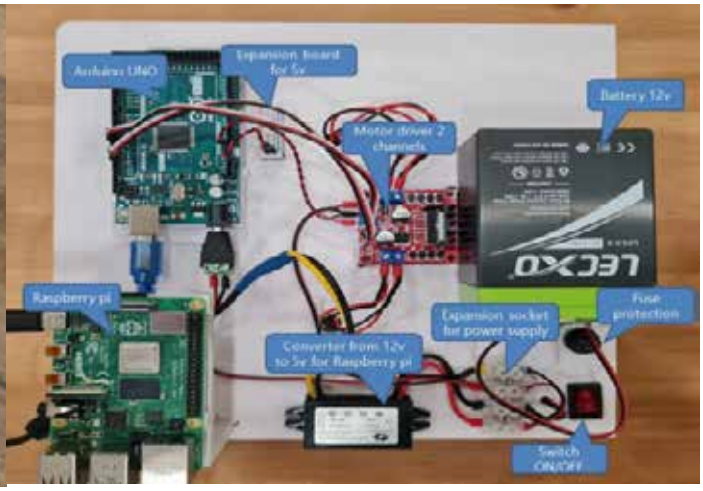

4

GRADUATION CEREMONY

CLASS OF 2022 GRADUATION CEREMONY

KCST held its second Graduation Ceremony on Wednesday, 30th of November 2022, at the KCST Campus in the presence of the Acting Secretary General for the Private Universities Council, Engineer Omar Al-Kandari, the Chairman of the Board of Trustees, Her Excellency Nabeela Al Mulla, KCST Board members, dignitaries and ambassadors, proud parents and graduating students.

The ceremony opened on a high-tech note with the KCST Robot “Rashid”, programmed and configured at the CAIR (Centre of Artificial Intelligence and Robotics) at KCST, delivering the welcome note.

The Master of Ceremony, Ms Ruba Najia, Head of the Languages Department, steered the ceremony beautifully from start to finish. The Chairman of the Board of Trustees, Her Excellency Ambassador Nabeela Al Mulla, warmly welcomed the dignitaries (including 9 ambassadors) and guests and thanked all the stakeholders for their unconditional support to the advancement of the University. The Guest of Honor, Engineer Omar Al-Kandari, highly appreciated the efforts of the University in equipping students with the right set of knowledge and skills to be able to prosper in the job market, especially since the degrees offered at KCST are in demand in the local job market.

In his talk, Prof. Khalid Al-Begain highlighted the achievements that KCST made in all aspects and in research and the advancement of knowledge.

Two speeches were delivered on behalf of graduating students. Honour student Naji Bader AlQallaf gave his speech in Arabic, and Honour student Alhanouf Khaled AlThaferi made her speech in English. They thanked everyone involved in seeing them through these trying and testing years. They told their fellow graduates never to lose faith in themselves as their journey had just begun, and they were entering a new chapter.

THE GRADUATES

Fall 2021-2022

Bachelor of Engineering in Electronics and Communications Engineering

HASAN KH R A R N ALAJMI
ABDULLAH M Y M ALMOUNES
HASAN K H A ALDASHTI
RAYAN L A L ALRASHIDI
SULAYMAN M A M ALHASHEMI
FAHAD M SH J J ALSHAMMARI
MANAR A F M S ALENEZI
ABDULRAHMAN E A A ALZAID

Bachelor of Engineering in Computer Engineering

ABDOLLAH HOSSEIN BAHRAMI
MOSAED E Y T MOHAMMAD
MOHAMMAD M A A ALAWAIS
ABDULLATIF M A KH ALSWEEDAN
MOHAMMAD A GH A M J ASHKANANI
MAALI A GH S ALMUTAIRI
AREEJ A A H ALATWAN
ABDULAZIZ S S S AL ALJOHAR
NIRAN S S S Z ALMUTAIRI
ALI H B E ABDULSALAM
AHAD A A F D A ALRASHIDI
ADEL HAMED . ALMOHAMMAD
SALEM N A GH ALSULAILI
GHNADER N M GH S ALMEEA
ALTAF B GH M ALOTAIBI
YOUSIF B M R ALRAJHI
HEBAH M M M A ALOTAIBI

Bachelor of Engineering in Computer Engineering

HUSSAIN A H A S ALHADDAD
MUBARAK T F M H ALHUJILAN
AHMAD EMAD MOHAMMAD ALSHABANI
JUMANAH E A E A ALFAILAKAWI
GHADEER H A S H ALMUTATRI
MANAL T F T ALGHUNAIMI
ANOUD R M A M ALMUHAITEEB
ASMAA M R J M ALDHAFAIRI
SHAIMA H GH A GHANIM
ASMAA H M H S ALSAEIDI
MUNEERAH A M M N M ALAJMI
ALDANAH F F F ALHAJRAF
REEM SH J SH S ALAJMI
RAWAA S A M M ALDHAEN
ALBANDARI S M M ALSHAMMARI
SARAH S S D A A ALSHEMERI
BANDAR L J DH ALOTAIBI
SHAREFA KH A A M ALHADDAD
MAJED MOHAMED AYMAN ALRAMADAN
BASHAYER S M KH ALMUTAIRI
ABDULRAHMAN M A S F ALOTAIBI
MEY RASHID A ALRESHEID
TAHREER H H A R GH ALMUTAIRI
DEMAH M H M R ALENEZI
RAWAN KH A J ALSHAMMARI

Spring 2021-2022

Bachelor of Science in Computer Science

MARYAM Y E H SUWAYED
SHEKHAH A M A ALKHALEFA
KHADIJAH A J A AHMAD
DALAL M KH S ALWEHAIB

Bachelor of Engineering in Electronics and Communications Engineering

FAHAD R S M R ALRASHIDI
DAWOUD S M A FAIRAQ
ATHBI M M M F ALMUTAIRI
ALSHIKHAH SHARIFAH A E H M SABTI
ABDULLAH A A D ALDUWAILAH
WADHHA A A Z ALMUTAIRI
GHALA R M H ALSALEM
ZAINAB S H ALBOUALI
SHREFAH T KH N M MUHSEN
HAMAD J A J M ALMODHAF
ANFAL S A A Y ALBARAHEM
SAJA A S S S ALALI
HAMAD S KH M M A ALENEZI
ABYAAR A N A A ABDULAZIZ
HALA M Z A ALSARBAL
MAHA A SH M ALENEZI
KHADEJAH H M M ALHAJ
SAAD M N M H ALSHAMMARI
REEM Z S F ALDHEFEERY
NEIAF Y Y M A ALSAMHAN

Bachelor of Engineering in Computer Engineering

ALBADER A A A ALMOHAMMAD
AJYAL MAZYAD O ALANAZI
HUMOOD A A M KH ALDOUSERI
ALI F A H F ALAJMI
SARA A KH M D ALMUTAIRI
YOUSEF H B E A ABDULSALAM
EISA M A TH WADAAN
YOUSSEF F S S S ALBATHANI
HAJAR E N D ALENEZI

Bachelor of Engineering in Computer Engineering

REEM M M Z ALANEZI
SAJA T A S ALENEZI
YOUSEF E M E D ALAZEMI
FAISAL A SH D F N ALENEZI
TEEF S GH M ALENEZI
ANOUD F T GH N ALSHAMMARI
BADER A R S BENALI
BALQIS M J A ALMOTOTAH
GHAZWAH E A A ALMUTAIRI
SAGER OBAID S ALENIZI
MAHA S H B M ALAAZMY
ABDULLAH SH F J ALKHALEDI
FATEMAH M S S F ALKHASHMAN
OHOUD A TH A M ALRASHEEDI
NOOR M F T ALSHAMMARI
SHOUQ S GH M ALENEZI
ALBANDARI M N M H M ALENEZI

Summer 2021-2022

Bachelor of Science in Computer Science

ABDALLAH T M A A ALENEZI

Bachelor of Engineering in Electronics and Communications Engineering

AMEENAH M A A M ALEBRAHIM
ABDUALLA M A ABDUALLA
SAOUD T M KH A ALSUBAIE
NOUF HAWARI I ALKHALDI
SHRIFAH A H A A A ALKHLDI
WAHAJ M S A ALKHALEDI
SHAHAD TARIK ZEYAD DUYAB ALAMASSI
TAIF S E A DH ALSHAMMARI
MARIAM S M N ALSAHLI

Bachelor of Engineering in Electronics and Communications Engineering

ZAHRAA R S A H ALSHEMMARI
FAISAL J M A Z ALGHADHOURI
ABDULAZIZ Y M A A BAQER
ASRAA A A GH ABBAS
ABDULLAH M B A ALKHALDI
MAHA B N M RUWAIE
NASSER B M M ALDHUFAIRI
FAHAD F Z N ALSULAILI
ABDULLAH A A M M ALHAJRI
MOHAMMAD E A M A ALZAIER
ABDULLAH F M F A ALAJMI
NASER M A L ALRASHIDI
KHALED A R B SH ALHAJRI
HAMAD A H A E ALAJMI
NAWAF M F N M ALFARHAN
SARA F H N ALANEZI
ZAINAB M A H MOHAMMAD
AISHAH A S A ALHASAN
ANWAR A F F ABHAR
WADHEHA S M S S ALTUWAJER
DALAL TH M A ALMUTAIRI
SARAH F M S M ALHAJRI

Bachelor of Engineering in Computer Engineering

ABDULLAH E N H GH ALADWANI
SAUD A A S ALFARHOUD
ALHANOOF KH A SH SH A ALTHAFIRI
NOURAH M KH T S ALSHAMMARI
ABDULRAHMAN M M H A ALENEZI
SETAH H M H ALAJMI
FAWAZ S E S ALHAJERI
SARAH M S S QALFAS
SUMIAH J A M ALMATAR
GHADER KH J H ALASHWAK

GRADUATION CEREMONY 2022

GRADUATION CEREMONY 2022

GRADUATION CEREMONY 2022

GRADUATION CEREMONY 2022

GRADUATION CEREMONY 2022

GRADUATION CEREMONY 2022

5

ALUMNI TESTIMONIALS

Alaa Al-Qattan

Electronic and Communications Engineering

I certainly recommend KCST for other students, because it is considered one of the best universities in Kuwait, in terms of its administration, faculty, and cooperation with all students, both male and female, which makes the student obtain the engineering degree without any obstacles and with all success.

I achieved excellence gratefully with hard work and diligence, and with the encouragement of the distinguished faculty, including Dr. Fares Al-Shammari, Dr. Mubarak Al-Anzi, Dr. Al-Tarabulsi, and all. They have my appreciation and respect

Mona Ali Mohammed

Electronic and Communications Engineering

My experience at KCST was truly exceptional. The institution provided me with the resources, opportunities, and unwavering support to pursue my passion for photography, culminating in the establishment of a thriving photography club (now known as the Media Club).

Beyond the rigorous academic curriculum and its emphasis on the practical applications of materials science, I wholeheartedly recommend KCST to prospective students. My academic interests leaned heavily towards communications and mathematics, and I found the instruction provided by Dr. Ahmad Alsayed Wakeel, Ms. Fatima, and Mrs. Alban to be particularly inspiring and engaging.

Shahad Haider Ali

Electronic and Communications Engineering

One of the best experiences I had at the university was getting to know friends and the beautiful environment that helped overcome difficulties. The administration and faculty were very cooperative.

I would recommend the university to students coming to university life because KCST has many advantages, the most important of which is self-development before academics.

The best subject at the university was communications, and the best doctor was Abu Al-Fadl, because he presented beautiful material and explained with precision and detail.

Majed Ramadan

Computer Engineering

I'm glad to be graduated from KCST, which had taught me a lot of things that helped me during my work career now a days.

I'd recommend KCST for others. KCST is such a good college experience, study environment and faculty staff.

Dr. Omar Adam was the best instructor I had. He helped us to understand the logic of the subjects that I have studied it with him during my college career.

Naji Al Qallaf

Electronic and Communications Engineering

Looking back to these past four years, my experience at KCST created an enhanced version of me, from a wide-eyed freshman stepping onto campus I have blossomed into a confident, capable individual ready to embrace the world. The daily challenges and jumping between tasks and subjects forced me to enhance my time management skills, learning skills, and increased my eagerness to learn. I never gave up on my dreams. I knew that if I worked hard, I could achieve anything I set my mind to, and I did. Therefore, I consider the whole experience a masterpiece.

Joining KCST is highly recommended. My nephew, one of the brightest minds among her colleagues, Jude AlSulaiman, is already a student there. All of my professors left a lasting impact on me through their unique approaches to teaching, career guidance, and personal growth. They hold a special place in my heart.

I thoroughly enjoyed every single moment of my courses, including Data Abstraction and Object-oriented Programming, Calculus B, Physics 1, Probability and Statistics, Nanosatellite Project, Circuit Theory, Control Systems, Instrumentation, Signal and Systems, and of course, my final year project - an environment-friendly, grid-connected multilevel inverter using photovoltaic panels.

Hassan Dashti

Electronic and Communications Engineering

The general atmosphere of the college is encouraging for study, and for me the best experience is the labs and their readiness with the best equipment necessary for teaching.

I recommend KCST for other students. Its specializations are in demand in the labour market and the faculty members are excellent.